COLUMN SCHEDULE (HSS COLUMNS TO BE CLASS 'C')

MARK / DATA	C1	C2	C3	C4	C5	C6	C7				
T/O HIGH PARAPET ELEV. 130'-0"											
T/O LOW PARAPET ELEV. 124'-0"											
U/S ROOF DECK ELEV. 122'-0" (H.L.)											
GROUND FLOOR ELEV. 100'-0"	HSS 8"x8"x0.313"	HSS 8"x8"x0.250"	HSS 8"x8"x0.313"	HSS 8"x8"x0.250"	HSS 7"x7"x0.250"	HSS 8"x8"x0.250"	HSS 7"x7"x0.250"				
U/S BASE PLATE	– 6" UNLESS NOTED OTHERWISE – 1'-6" AT R.W.L., LOCATIONS DENOTED THUS ⊗ ON PLAN.										
BASE PLATE SIZE	10"x3/4" x1'-4"	10"x3/4" x1'-4"	10"x3/4" x1'-4"	10"x3/4" x1'-4"	9"x3/4" x1'-3"	10"x3/4" x1'-4"	9"x3/4" x1'-3"				
	AT BRACING COLUMNS MARKED * PROVIDE BASE PLATE THICKNESS OF 1" (MIN.)										
ANCHOR BOLTS	4-3/4" ø THROUGHOUT 1" / 1/2" FOR COLUMNS MARKED THUS * PROVIDE 4-1 1/2"ø 2" / 1/6" (UNLESS NOTED OTHERWISE)										
REMARKS	LONG DIMENSION OF BASE PLATE IS PARALLEL TO LINE OF JOISTS AND EXTERIOR WALL. PROVIDE 6mm LEVELLER PLATE AT EACH COLUMN, 1/2" PROJECTION ALL AROUND BASE PLATE. PROVIDE 1/2" CAP PLATE (MINIMUM) FOR ALL COLUMNS.										

SPREAD FOOTING SCHEDULE

MARK / DATA	F1	F2	F3	F4	F5	F6					
SIZE	6'-6"x 6'-6"	6'-0"x 6'-0"	6'-6"x 6'-6"	4'-0"x 4'-0"	3'-6"x 3'-6"	SEE PLAN					
DEPTH (MIN.)	1'-4"	1'-4"	1'-4"	1'-2"	1'-2"	1'-4"					
REINFORCING (B.E.W.)	7-15M	7-15M	8-15M T&B E.W	5-15M	4-15M	15M@10"					
LOAD IN KIPS (WORKING)	114	97	114	43	33	120					
REMARKS	1. BEARING CAPACITY 3000 P.S.F. (150 kPa) 2. PROVIDE DOWELS TO MATCH PIER VERTICALS.										

COLUMN PROFILE SHOWN MAY VARY WITH COLUMNS SHOWN ON COLUMN SCHEDULE.
REINFORCE ALL PIERS WITH 4-15M VERTICALS, 10M@12" TIES UNLESS NOTED OTHERWISE.
REFER TO DETAIL A/S400 FOR TIE REINF. DETAIL AT BRACING COLUMNS (MARKED AS *).

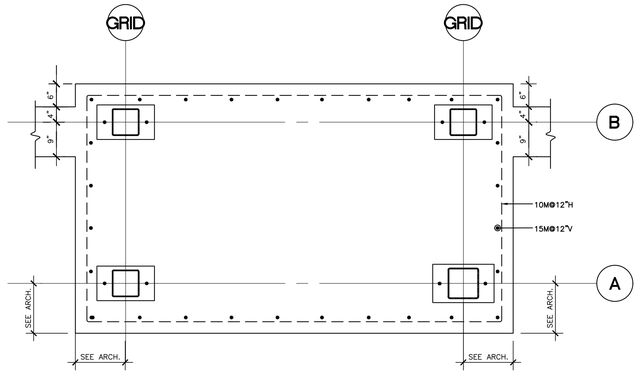

PIER P5 - REINF. WITH 15@12"V & 10@12"H
SCALE: 3/4" = 1'-0"

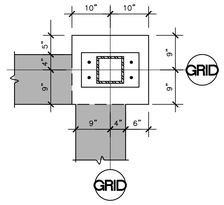

PIER P4 - 18"x20"
SCALE: 3/4" = 1'-0"
4-20M V

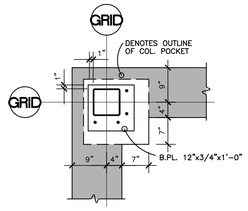

PIER P3 - 20"x20"
SCALE: 3/4" = 1'-0"

PIER P3A - (4-20M V)
SCALE: 3/4" = 1'-0"

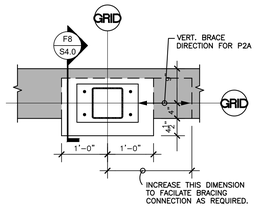

PIER P2A - 20"x24"
SCALE: 3/4" = 1'-0"
4-20 EQUALLY DISTRIBUTED, 10M@12" TIES
(SEE DETAIL A/S400)

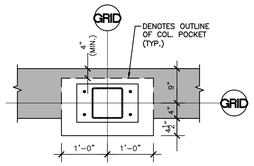

PIER P2 - 20"x24"
SCALE: 3/4" = 1'-0"

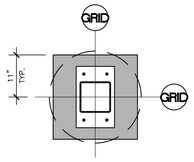

(ALTERNATE 24"ø)

PIER P1 - 22"x22"
SCALE: 3/4" = 1'-0"

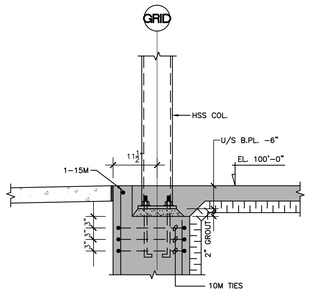

F8 / S4.0 DETAIL @ BRACING COLUMNS
SCALE: 3/4" = 1'-0"
REFER TO SECT. F2 FOR REMAINDER OF SECTION

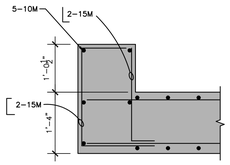

F7 / S4.0 SECTION
SCALE: 3/4" = 1'-0"

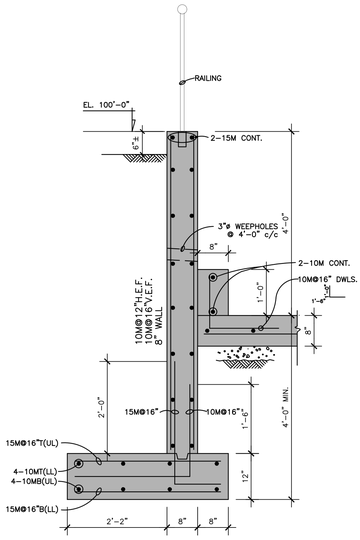

F6 / S4.0 SECTION
SCALE: 3/4" = 1'-0"

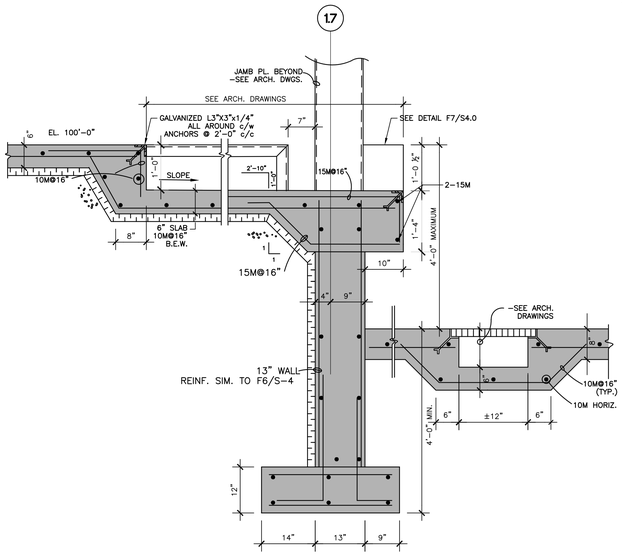

F5 / S4.0 SECTION
SCALE: 3/4" = 1'-0"

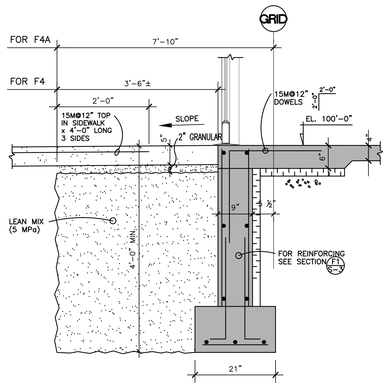

F4 / S4.0 SECTION
SCALE: 3/4" = 1'-0"
FROST SLAB DETAIL

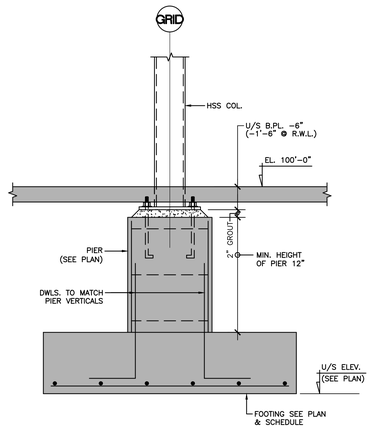

F3 / S4.0 SECTION
SCALE: 3/4" = 1'-0"

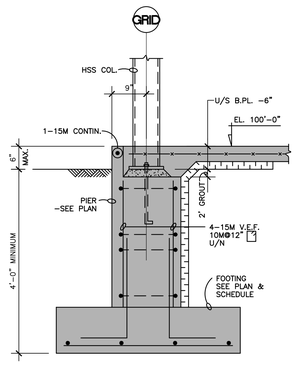

F2 / S4.0 SECTION
SCALE: 3/4" = 1'-0"
DETAIL @ EXTERIOR PIER/FOOTING

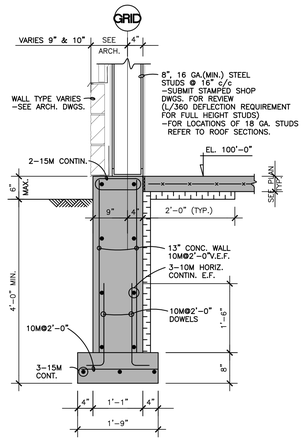

F1 / S4.0 SECTION
SCALE: 3/4" = 1'-0"
TYPICAL EXTERIOR WALL SECTION U/N

CLIENT:
PETSMART
19601 North 27th Avenue
Phoenix, Arizona 85027 - (623) 580-6100
CLIENT REF #: 1234

PROJECT:
14K 2026 CANADIAN INSTRUCTION SET

AUGUST 05, 2026

CONSULTANT:

ARCHITECT:

SEAL:

CITY SEAL:

DISCLAIMER: COPYRIGHT:
THIS DRAWING AND DESIGN IS COPYRIGHT PROTECTED WHICH SHALL NOT BE USED, REPRODUCED OR REVISED WITHOUT WRITTEN PERMISSION BY PETSMART. THE CONTRACTOR SHALL CHECK AND VERIFY ALL DIMENSIONS AND UTILITY LOCATIONS AND REPORT ALL ERRORS AND OMISSIONS PRIOR TO COMMENCING WORK.
THIS DRAWING IS NOT TO BE SCALED.

ISSUED FOR:

NUMBER	ISSUE	DATE

PROJECT NO: CA0073426.0987
DATE: 05.08.26
ORIGINAL SCALE: AS NOTED
IF THIS BAR IS NOT 1" LONG, ADJUST YOUR PLOTTING SCALE. 1"
DESIGNED BY:
DRAWN BY:
CHECKED BY:
PAGE #: 34 OF: 54
DISCIPLINE: STRUCTURAL

TITLE:
SCHEDULES, PIER DETAILS & FOUNDATION SECTIONS

SHEET NUMBER:
S4.0